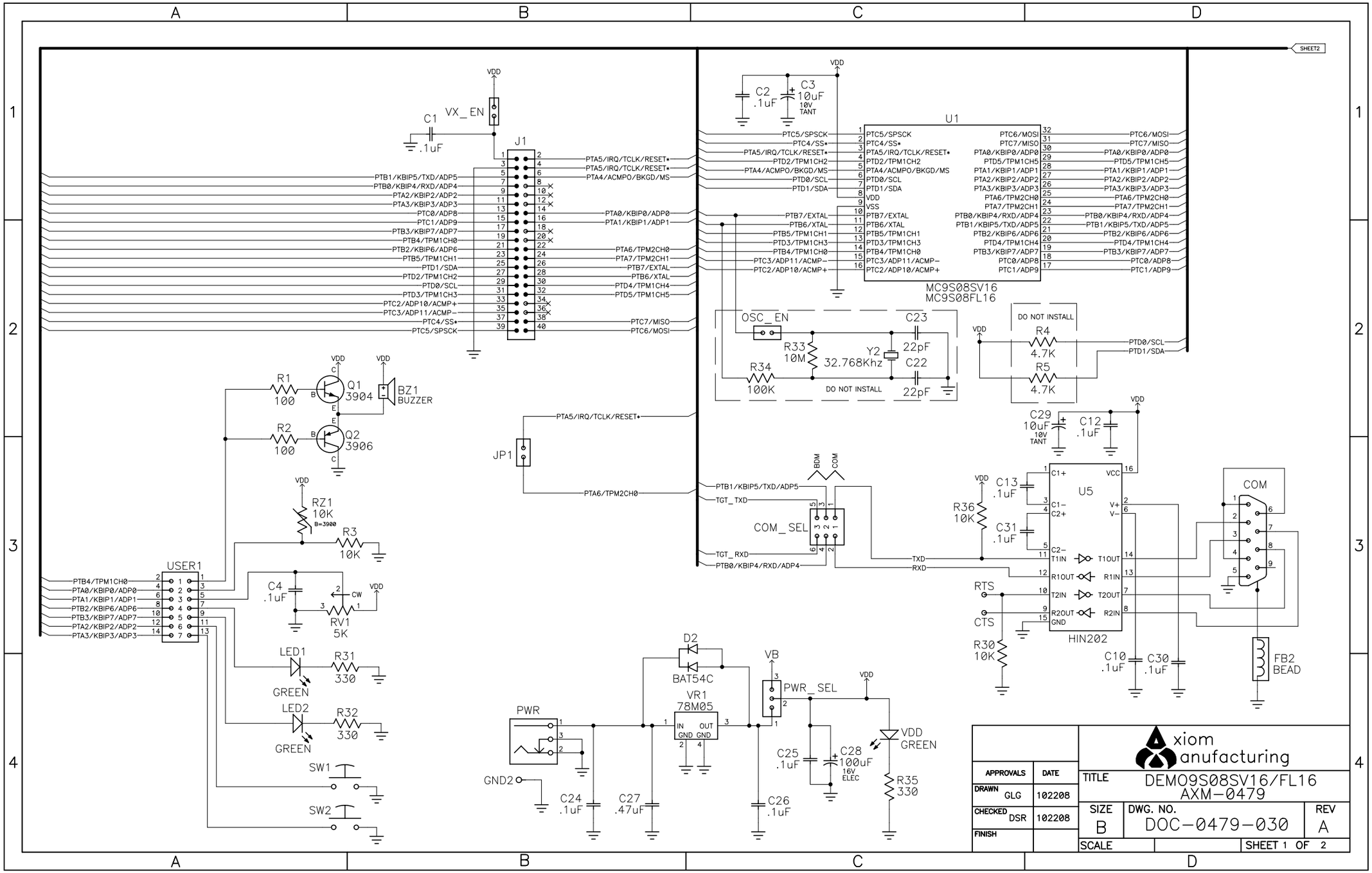
SHEET2
VDD
VX_EN
C1
.1uF
J1
PTA5/IRQ/TCLK/RESET*
PTA4/ACMPO/BKGD/MS
PTB1/KBIP5/TXD/ADP5
PTB0/KBIP4/RXD/ADP4
PTA2/KBIP2/ADP2
PTA3/KBIP3/ADP3
PTC0/ADP8
PTC1/ADP9
PTB3/KBIP7/ADP7
PTB4/TPM1CH0
PTB2/KBIP6/ADP6
PTB5/TPM1CH1
PTD1/SDA
PTD2/TPM1CH2
PTD0/SCL
PTD3/TPM1CH3
PTC2/ADP10/ACMP+
PTC3/ADP11/ACMP-
PTC4/SS*
PTC5/SPSCK
PTA0/KBIP0/ADP0
PTA1/KBIP1/ADP1
PTA6/TPM2CH0
PTA7/TPM2CH1
PTB7/EXTAL
PTB6/XTAL
PTD4/TPM1CH4
PTD5/TPM1CH5
PTC7/MISO
PTC6/MOSI
C2
.1uF
C3
10uF
10V
TANT
U1
MC9S08SV16
MC9S08FL16
OSC_EN
R33
10M
Y2
32.768Khz
C23
22pF
C22
22pF
R34
100K
DO NOT INSTALL
R4
4.7K
R5
4.7K
R1
100
Q1
3904
BZ1
BUZZER
R2
100
Q2
3906
JP1
RZ1
10K
B=3900
R3
10K
USER1
C4
.1uF
CW
RV1
5K
LED1
GREEN
R31
330
LED2
GREEN
R32
330
SW1
SW2
BDM
COM
COM_SEL
TGT_TXD
TGT_RXD
TXD
RXD
C29
10uF
10V
TANT
C12
.1uF
C13
.1uF
C31
.1uF
R36
10K
U5
HIN202
C1+
C1-
C2+
C2-
T1IN
R1OUT
T2IN
R2OUT
GND
VCC
V+
V-
T1OUT
R1IN
T2OUT
R2IN
RTS
CTS
R30
10K
C10
.1uF
C30
.1uF
COM
FB2
BEAD
D2
BAT54C
VR1
78M05
IN
OUT
GND
VB
PWR_SEL
PWR
GND2
C24
.1uF
C27
.47uF
C26
.1uF
C25
.1uF
C28
100uF
16V
ELEC
VDD
GREEN
R35
330
xiom
anufacturing
APPROVALS
DATE
DRAWN
GLG
102208
CHECKED
DSR
102208
FINISH
TITLE
DEMO9S08SV16/FL16
AXM-0479
SIZE
B
DWG. NO.
DOC-0479-030
REV
A
SCALE
SHEET 1 OF 2

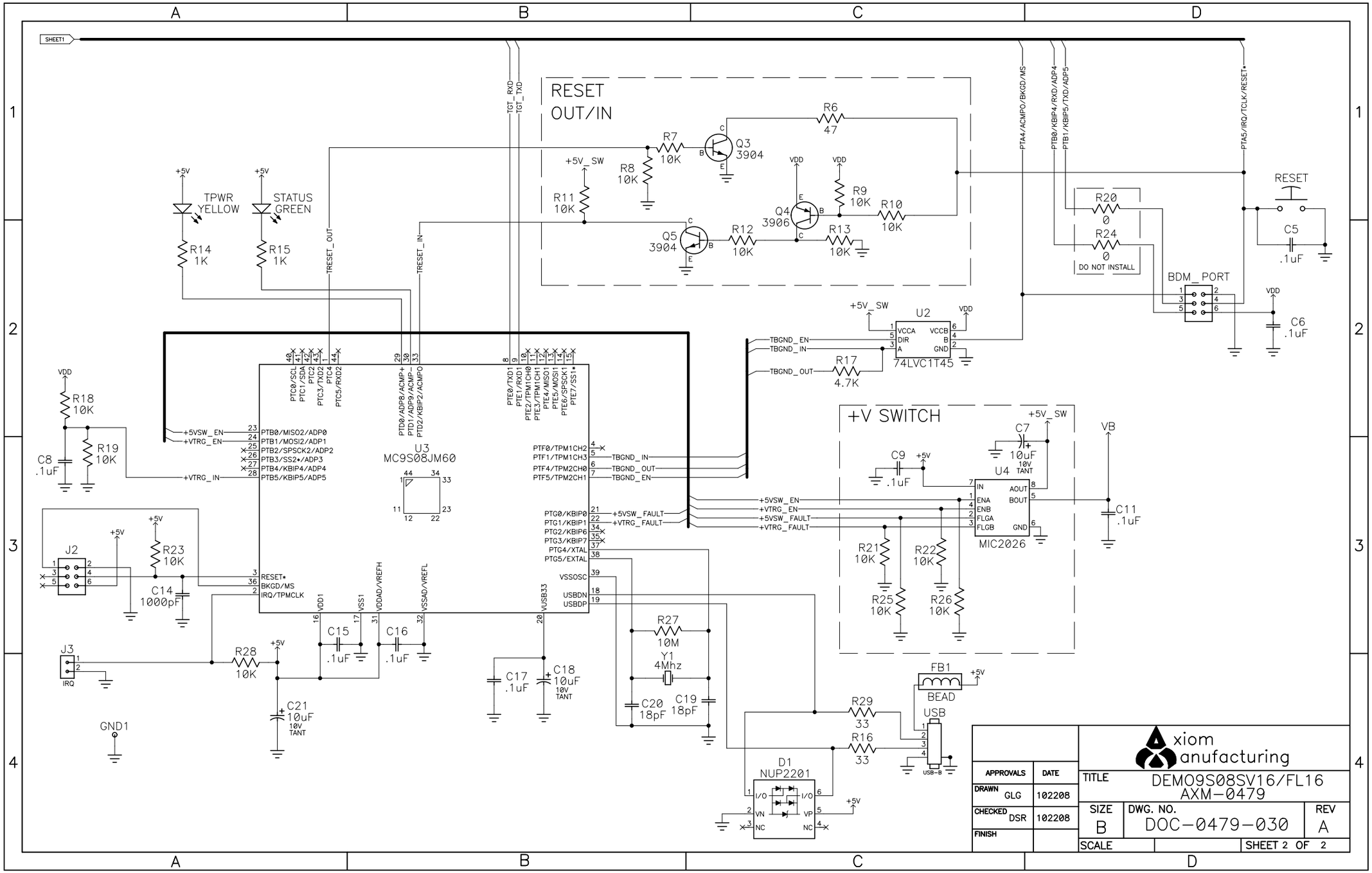

APPROVALS	DATE
DRAWN GLG	102208
CHECKED DSR	102208
FINISH	

xiom
anufacturing

TITLE DEMO9S08SV16/FL16
AXM-0479

SIZE	DWG. NO.	REV
B	DOC-0479-030	A

SCALE | SHEET 2 OF 2