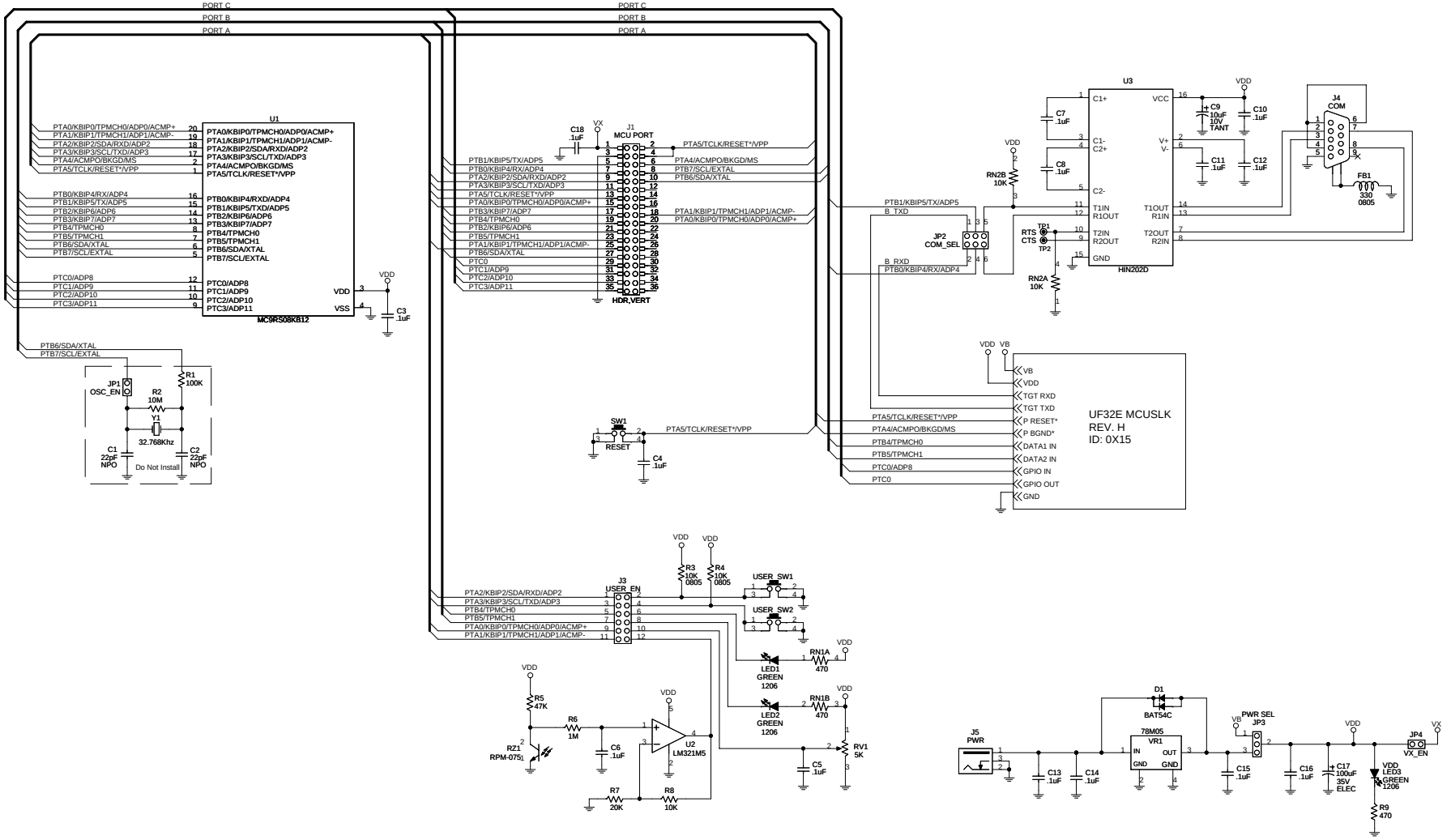

NOTE:
ALL RESISTORS AND CAPACITORS 0603 UNLESS OTHERWISE SPECIFIED

Approvals		Date
Drawn	GLM	062909
Checked	DSR	062909
Finish		

AXIOM manufacturing

Title: DEMO9RS08KB12 AXM-0494

Size: C | Document Number: DOC-0494-030 | Rev: A

Date: Monday, July 06, 2009 | Sheet 1 of 3